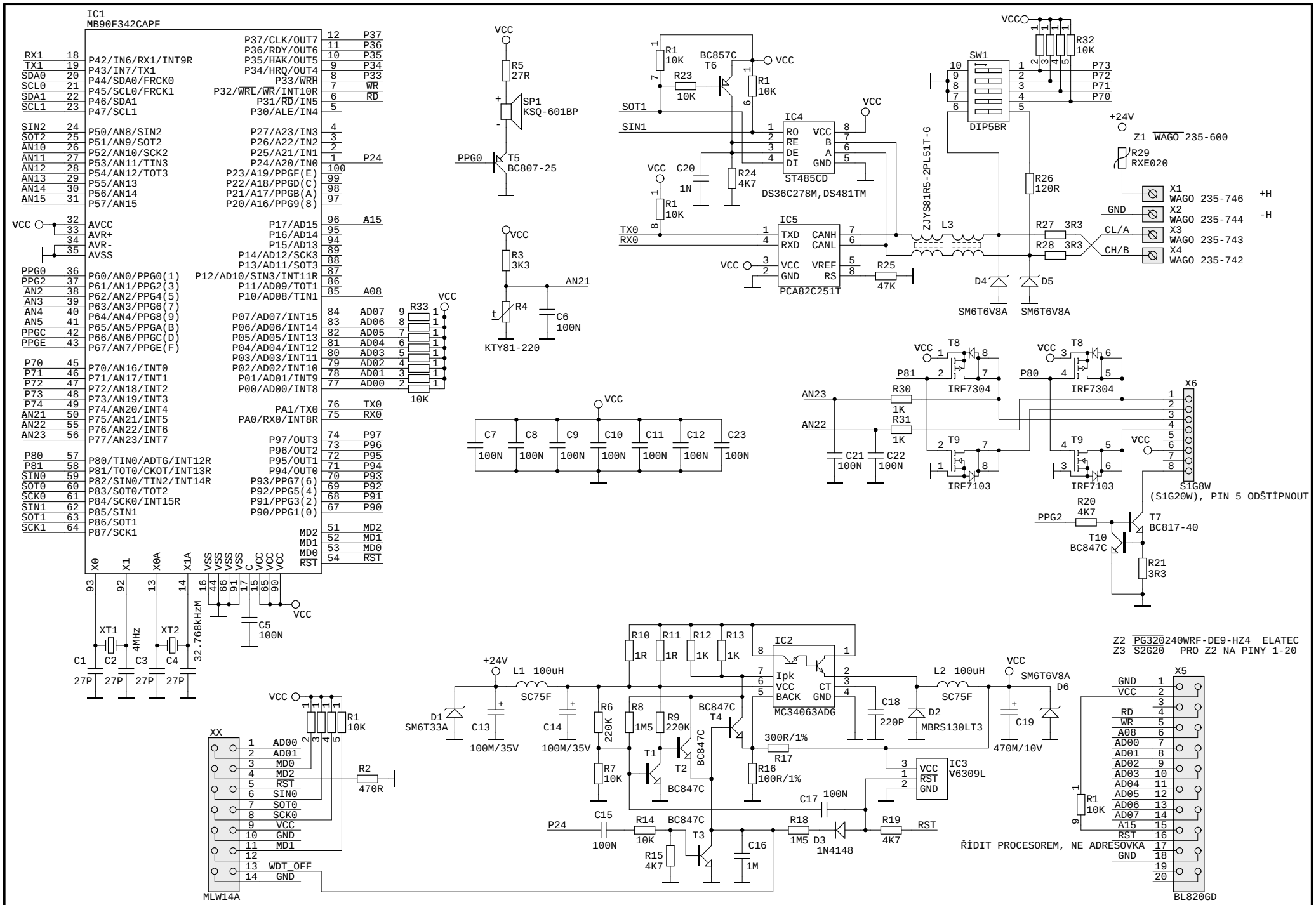

PROLOG s.r.o. POD OŘECHOVKOU33 PRAHA6 CZ-16000	PCB NAME KOBRA-C_AAA	DRAWING CIRCUITS SCHEMA	PRODUCT KOBRA-A	PROJECT KOBRA-A	ORDER PROLOG	AUTHOR ING. ŠTEFAN DUBECKÝ	DATE 14:09 NOV-27-2006	FORM A4	PAGE 1/1